dotworkz Parapet Mount

Part # IPV-0025-T-80

IPV-0025-T-80

Overview

IPVision's Compact Mount is designed to be used on roof top parapets. Flat mounting surface accepts all dotworkz cooldome series enclosures.

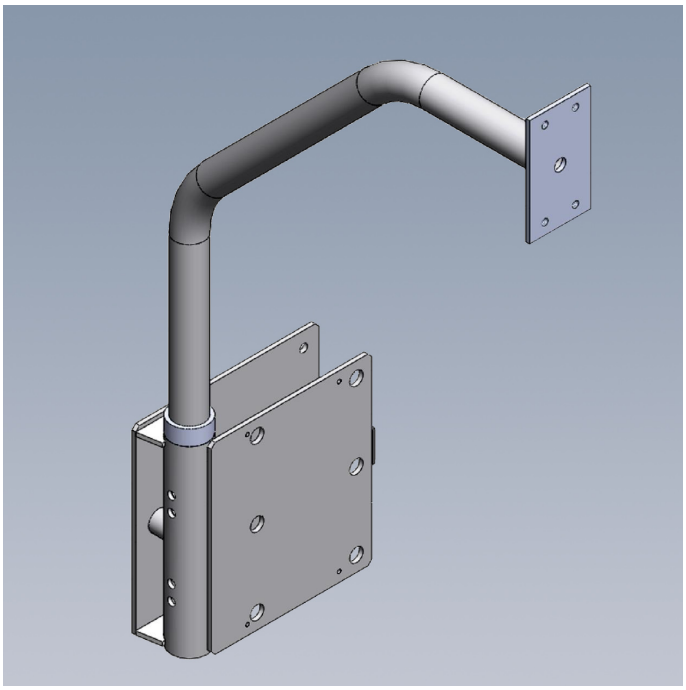

Key Features

- 100 lb. load rating
- All aluminum construction
- Epoxy painted per Mil-P-53022-Type 1
- Adjustable in 45 degree increments

Applications

Mount to structure wall or parapet utalizing dot-workz cooldome series enclosures.

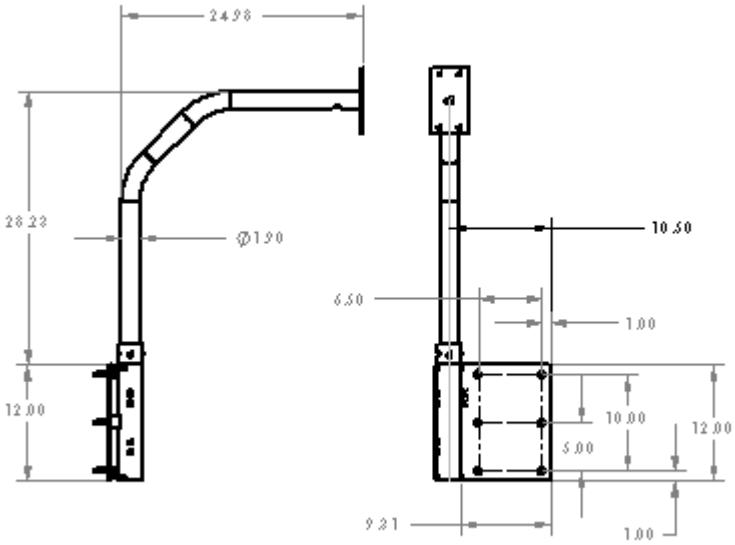

Shipping Specifications

Part Number	Unit Weight	Shipping Weight
IPV-0025-T-80	15.4 lbs	17 lbs

Product Attributes

Body Construction	Aluminium
Environment	Outdoor
Mount Style	Roof / Wall
RoHS	Yes
WEEE	Yes

RoHS COMPLIANT

*Product specifications are subject to change without notice.

IPVision, Inc. Corporate Headquarters
3562 E. 42nd Stravenue
Tucson, AZ 85713

Toll Free: 866-775-9454
Phone: 520-571-6881
Fax: 520-571-7973

Sales inquaries
sales@ipvis.com

Phoenix Branch
455 W. 21st Street, Suite 108
Tempe, AZ 85282

Toll Free: 866-775-9454
Phone: 480-736-7303
Fax: 480-736-1006

© 2008 IPVision, Inc. | www.ipvis.com